NOTE: DIMENSIONS IN [ ] ARE IN INCHES.

PROOF LOAD 4,150 LBS. MIN.

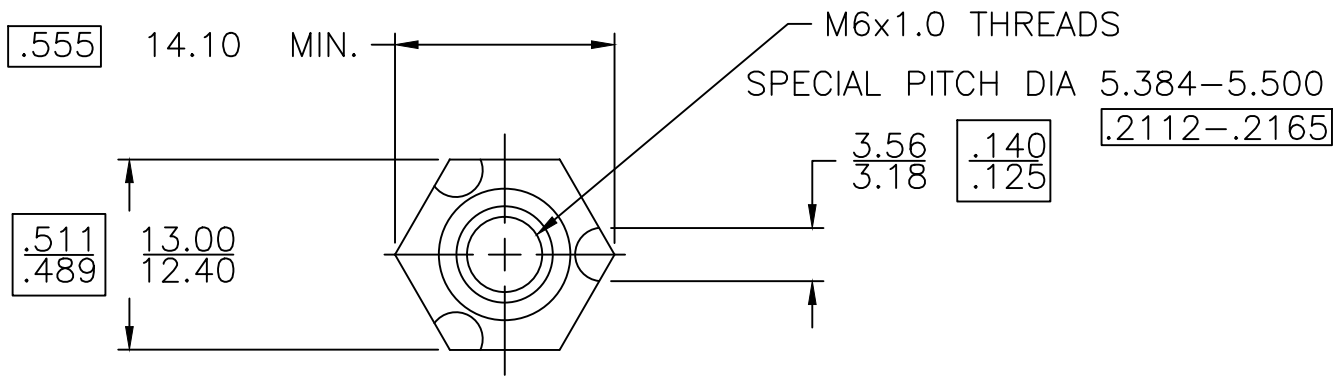

PREVAILING TORQUE:

1ST ON – 26.5 IN. LBS. MAX
1ST OFF – 4 IN. LBS. MIN
CLAMP LOAD – 2,200 LBS.

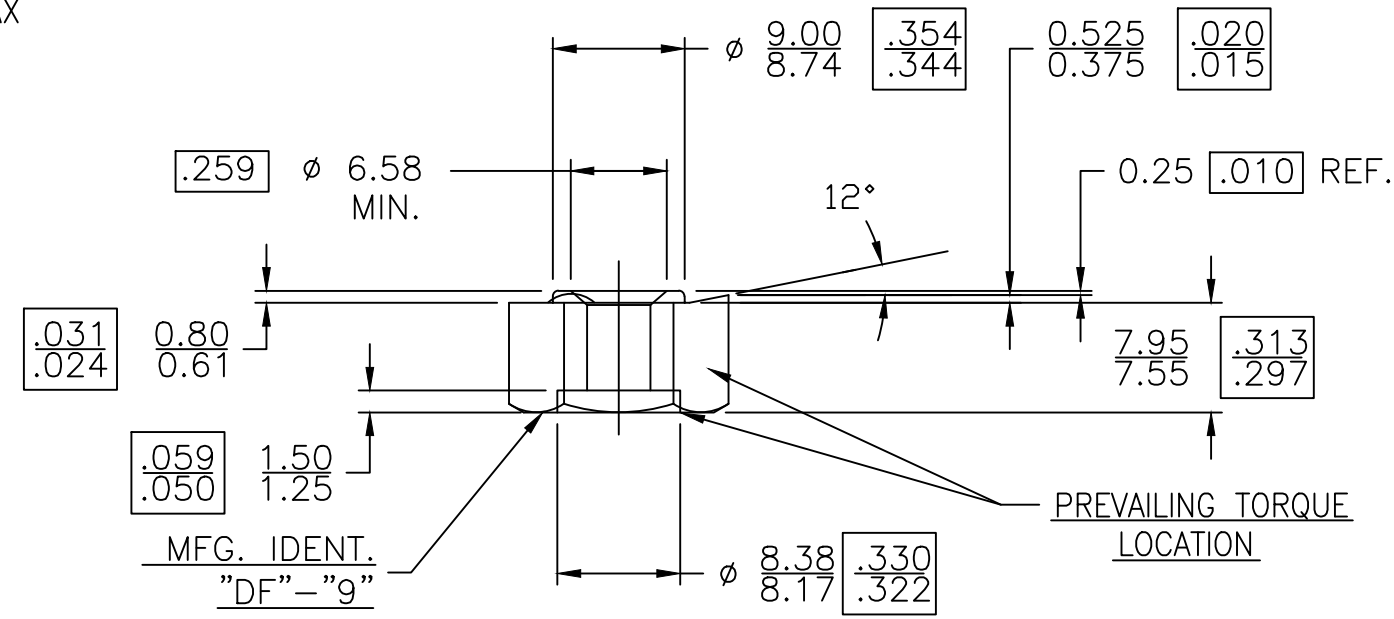

C/N	S	CHANGE	DATE	DR	CH	OK
	A	ADDED PRAVAILING TORQUE	11/12/01	MAK		
	B					
	C					
	D					
	E					

DECKER FASTENERS, LTD.

CONFIDENTIAL

THIS DOCUMENT IS THE EXCLUSIVE PROPERTY OF DECKER MANUFACTURING CORPORATION AND IS TO BE RETURNED TO THE COMPANY UPON REQUEST. THE CONTENTS ARE NOT TO BE USED IN ANY MANNER DETRIMENTAL TO THE INTERESTS OF THE COMPANY. THEY ARE NOT TO BE DISCLOSED OR REPRODUCED IN WHOLE OR IN PART WITHOUT EXPRESSED CONSENT.

PART NAME: M6X1.0 HEX WELD NUT		
CUSTOMER PART NO.		
MATERIAL: C1010 STEEL		
FINISH: PLAIN		SCALE: 2xSIZE
DRAWN BY: MAK	DATE: 10/26/01	PART NO.
CHECKED BY	APPROVED BY	100–1573